Stormtech™
ARCHITECTURAL
GRATES + DRAINS

THE ORIGINAL LINEAR DRAIN THE ORIGINAL

SD90H

Slot Drain



90mm Drain with UPVC Beige Insert

The SD90 features a 25mm opening on the top with 20 slots draining into a concealed 90mm drain pipe with UPVC beige insert.

The PVC insert comes with 10mm holes at 50mm centres .

The Slot Drain can be completed with a 30mm wide architectural wedge-wire grate as an optional item.

Code SD90H
Range Slot Drain
Category Modular Kits
Channel Material uPVC

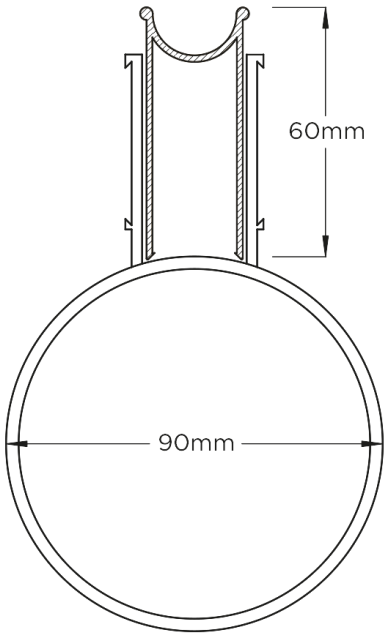

Grates longer than 1500mm supplied in sections. Tile Inserts longer than 1200mm supplied in sections. Channels over 3000mm supplied in sections with joiner. +/-2mm tolerance on dimensions.

SPECIFICATIONS + DIMENSIONS

Channel Width	25mm
Channel Depth	Adjustable
Length(s)	3030mm
Outlet Size	N/A

PRODUCT APPLICATIONS

Commercial Drainage
Courtyard / Patio Drainage
Driveway Drainage
Pool and Spa Area Drainage
Paved Area Drainage

Copyright © Stormtech Pty Ltd. Patent 733361. Drawings not to scale, please use dimensions shown.
Downloaded 28/11/2026 (please check for updates)